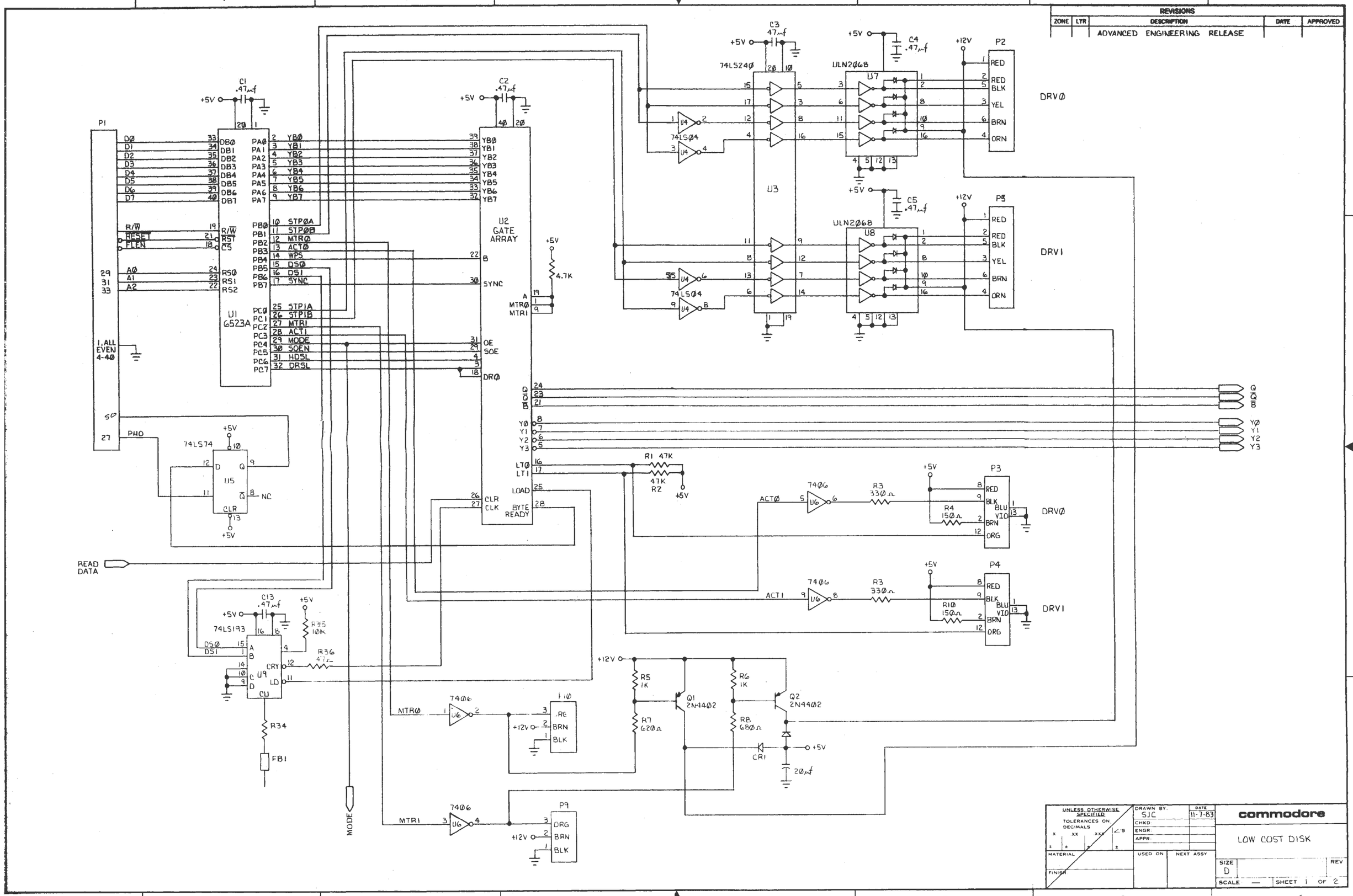
REVISIONS
ZONE | LTR | DESCRIPTION | DATE | APPROVED
ADVANCED ENGINEERING RELEASE
P1
U1 6523A
U2 GATE ARRAY
U3 74LS240
U4 74LS04
U5 74LS74
U6 7406
U7 ULN2068
U8 ULN2068
U9 74LS193
P2
P3
P4
P9
DRV0
DRV1
READ DATA
MODE
MTR0
MTR1
ACT0
ACT1
R1 47K
R2 47K
R3 330Ω
R4 150Ω
R10 150Ω
R5 1K
R6 1K
R7 620Ω
R8 680Ω
R34
R35 10K
R36 47K
FB1
Q1 2N4402
Q2 2N4402
CR1
commodore
LOW COST DISK
SIZE D
SHEET 1 OF 2
DRAWN BY SJC
DATE 11-7-83
UNLESS OTHERWISE SPECIFIED
TOLERANCES ON DECIMALS

REVISIONS				
ZONE	LTR	DESCRIPTION	DATE	APPROVED
		SEE SHEET 1		

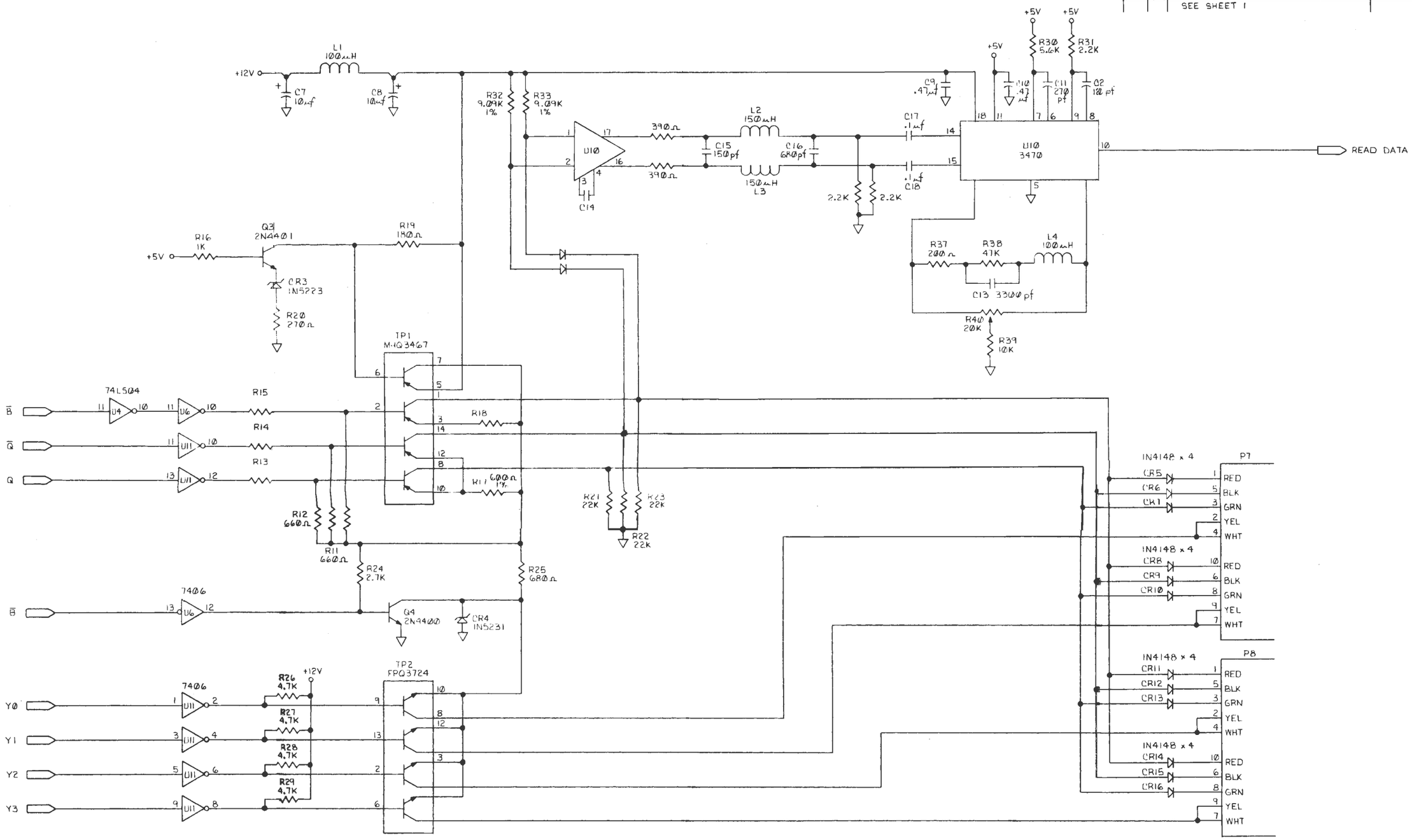

UNLESS OTHERWISE SPECIFIED TOLERANCES ON DECIMALS .X ± .XX ± .XXX ± ∠'S ±	DRAWN BY: SJC	DATE 11-7-83	commodore
	CHKD		LOW COST DISK
	ENGR		
	APPR		
MATERIAL	USED ON	NEXT ASSY	SIZE — REV
FINISH			SCALE — SHEET 2 OF 2

CONFIDENTIAL BLUEPRINT